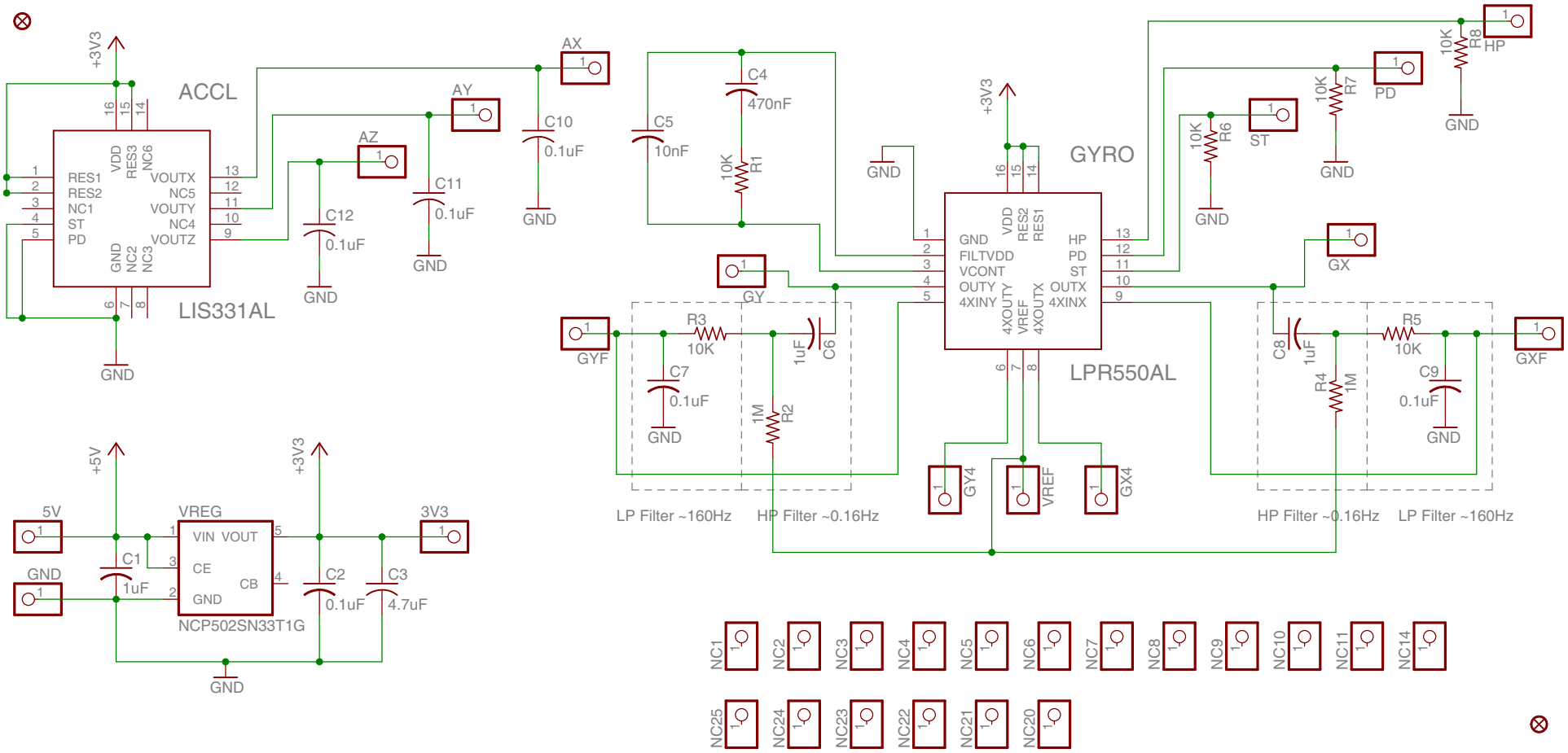
ACCL
LIS331AL
+3V3
RES1
RES2
NC1
ST
PD
VDD
RES3
NC6
VOUTX
NC5
VOUTY
NC4
VOUTZ
GND
NC2
NC3
AX
AY
AZ
C10
0.1uF
C11
0.1uF
C12
0.1uF
GND
C5
10nF
C4
470nF
10K
R1
GYRO
LPR550AL
GND
FILTVDD
VCONT
OUTY
4XINY
VDD
RES2
RES1
HP
PD
ST
OUTX
4XINX
4XOUTY
VREF
4XOUTX
GY
GX
GYF
GXF
R3
10K
C7
0.1uF
1uF
C6
1M
R2
C8
1uF
R4
1M
R5
10K
C9
0.1uF
GY4
VREF
GX4
LP Filter ~160Hz
HP Filter ~0.16Hz
HP Filter ~0.16Hz
LP Filter ~160Hz
10K
R6
ST
10K
R7
PD
10K
R8
HP
+5V
5V
GND
VREG
VIN
VOUT
CE
CB
GND
NCP502SN33T1G
C1
1uF
C2
0.1uF
C3
4.7uF
3V3
NC1
NC2
NC3
NC4
NC5
NC6
NC7
NC8
NC9
NC10
NC11
NC14
NC25
NC24
NC23
NC22
NC21
NC20