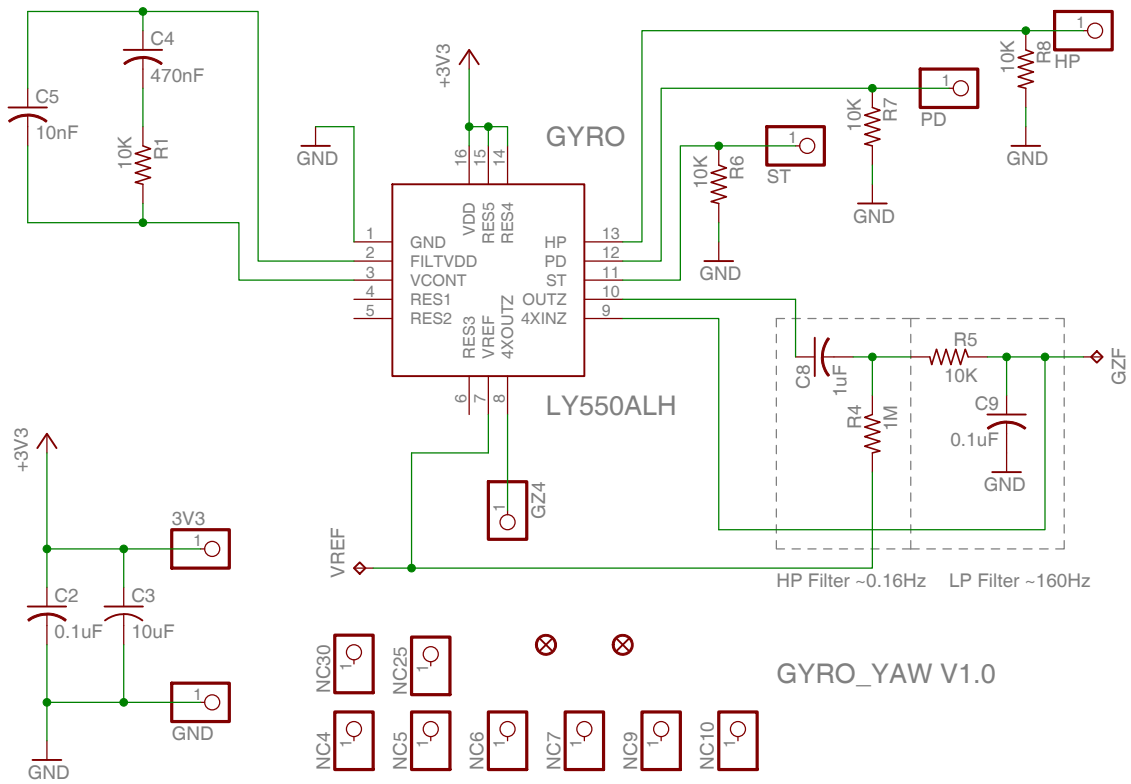
GYRO
LY550ALH
GND
FILTVDD
VCONT
RES1
RES2
VDD
RES5
RES4
RES3
VREF
4XOUTZ
HP
PD
ST
OUTZ
4XINZ
+3V3
C4
470nF
C5
10nF
10K
R1
10K
R6
ST
10K
R7
PD
10K
R8
HP
GZ4
VREF
C8
1uF
R4
1M
R5
10K
C9
0.1uF
GZF
HP Filter ~0.16Hz
LP Filter ~160Hz
3V3
C2
0.1uF
C3
10uF
NC30
NC25
NC4
NC5
NC6
NC7
NC9
NC10
GYRO_YAW V1.0